Siren System - CHP Version

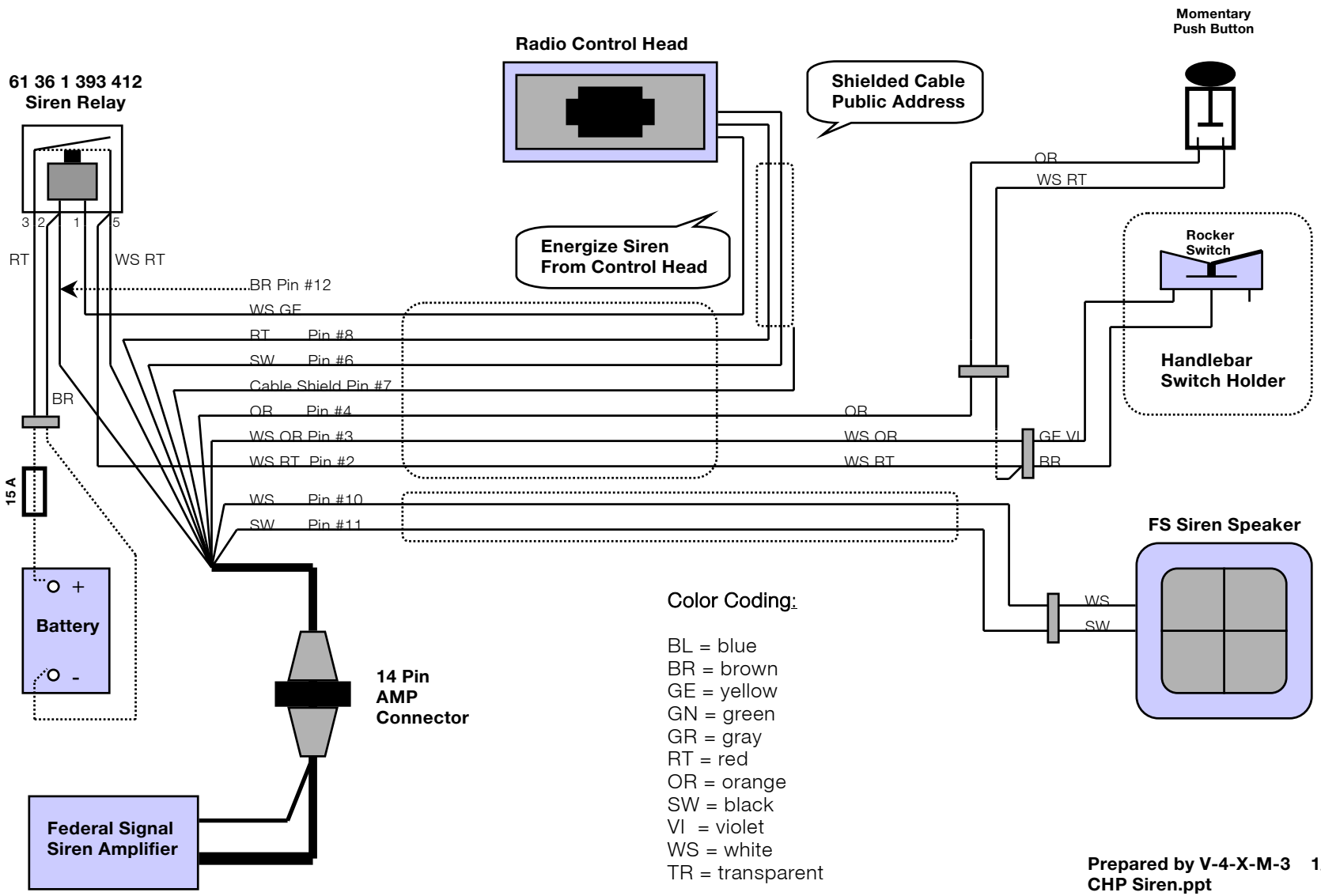

Prepared by V-4-X-M-3 1/28/2002
CHP Siren.ppt
© 2002 BMW Motorcycles